Grupa LOTOS S.A.	**TECHNICAL SPECIFICATION**	Spec. N° 3210
	Control system for turbine driven machines	

Contents

1 Subject of specification 2
2 Scope of validity 2
2.1 Deviations 2
2.2 Exclusions 2
3 Hierarchy of documents 2
4 Definitions and designations 3
5 Description 3
5.1 Discussion of control system for turbine driven equipment on example of compressor 3
5.2 Hardware implementation of control systems 5
5.3 Location of control devices 5
5.4 Rotational speed pick-ups 5
5.5 Critical value prevention 6
5.6 Documentation 7
6 Relevant documents 7
7 Norms and standards 7
7.1 Directives of European Community 7
7.2 PN 8
8 Enclosures 8
9 Record of changes 9

This document is the property of LOTOS Group SA.. Copiyng and giving it to other is forbidden without express written authority by LOTOS Group SA

1 Subject of specification

This specification used in conjunction with other technical specifications of LOTOS Group S.A., establishes minimal requirements constituting quality guide for execution of control and instrumentation technical design in scope of control system for turbine driven rotating machines, such as: compressor, pump, fan, generator.

Some issues going beyond subject of this specification, shall be subject matter of detailed standards, or shall require particular independent considerations.

2 Scope of validity

This specification shall be used when preparing both quotations and Purchase Orders concerning planned LOTOS Group S.A. new investments and modernizations.

It shall also be a base for preparation of other detailed specifications and quotations relevant for package units or other equipment deliveries.

2.1 Deviations

Any deviation from this specification and the relevant specifications, standards and related documents including proposals, which the bidder claims to be economically and / or technically superior solutions, must be submitted in writing for review and approval by Grupa LOTOS SA. Non-approved exceptions are not acceptable by Grupa Lotos S.A.

The supplier must report in writing any ambiguity in this or any other specifications of Grupa LOTOS SA or non-compliance with the referred documents / standards and obtain a written explanation from Grupa Lotos SA.

2.2 Exclusions

This specification does not relate to machinery monitoring systems and machinery monitoring protection systems, for which independent specification GLSA 3200 „Machinery monitoring system" has been elaborated.

This specification does not relate, either, to frequency converters, which have been covered by specification GLSA 4850 Electronics power converters.

3 Hierarchy of documents

In case of conflicts existing between this specification and other documents, the following order of precedence shall govern:

- The current Polish legislation
- Terms of purchase order / contract and other requirements agreed in writing with GLSA
- Data Sheets approved by GLSA
- This specification
- Other Specifications
- Drawings and other documents
- Standards

4 Definitions and designations

GLSA – Grupa Lotos S. A.

CR - Control Room

DCS - Distributed Control System

ESD - Emergency Shut Down

SIS -Safety Instrument System

HMI - Human Machine Interface

I/O - Input/Output

LCD - Liquid Crystal Display

PLC - Programmable Logic Controller

UPS - Uninterrupted Power Supply

5 Description

5.1 Discussion of control system for turbine driven equipment on example of compressor

An example of rotating machine that is of particular significance for technological process, is compressor driven by steam or gas turbine. This specification shall discuss requirements for control system connected with turbine driven compressor. For other turbine driven machines, such as: pumps, fans and generators, some control systems may not be present, but supplier shall keep requirements of this specification that are relevant to machines delivered by him. In each case, control systems for turbine driven equipment are subject to detailed adjustment with GLSA..

Task of compressor is to deliver gas of required demand (pressure) to process, with simultaneous control of its flow, which shall protect the machine against surge (surge protection system). Control systems, controlling rotational speed of compressor/turbine as well as flow on compressor's recirculation (return of gas from discharge to suction side of compressor) are responsible for realisation of these functions. Rotational speed of compressor, responsible for its capacity (discharge pressure) follows up process demand.

In case when compressor operating at constant rotational speed is selected, it is possible to control capacity of the compressor by means of compressor's guide vanes setting angle.

Pictorial diagram of control systems used for turbine driven compressor is presented below.

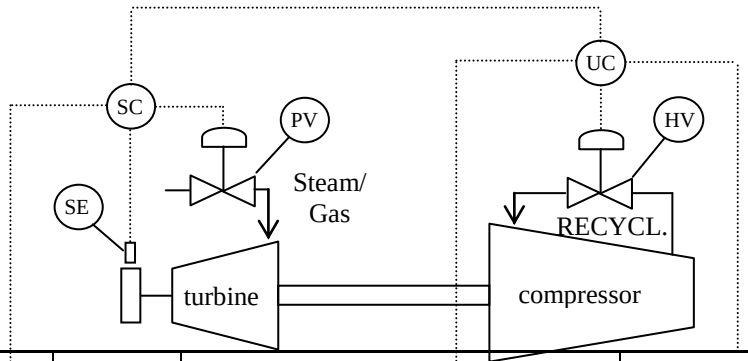

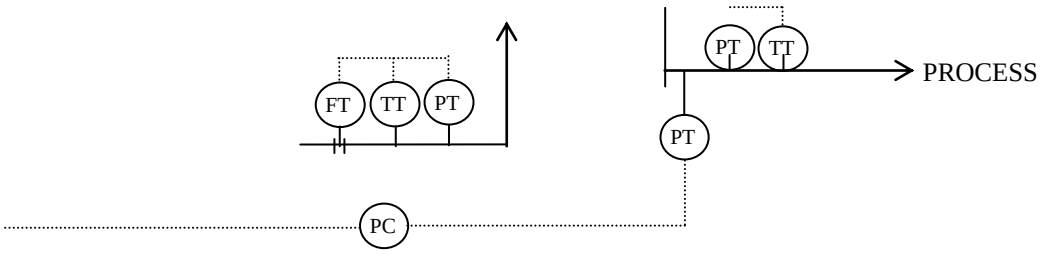

Fig. Turbine and compressor control

Note: Above-quoted diagram of control system for turbine and compressor shall be meant as hypothetical case serving presentation of control concept for rotating machine of compressor/turbine type. Specific solution depends on concrete supplier.

Control system for compressor driven by gas or steam turbine consists of 3 control systems directly influencing compressor capacity (references to individual control systems on above-presented pictorial diagram are given in brackets):

- Turbine rotations' control system (SC) – the control system consisting of rotational speed pick-ups, speed governor, control valve with hydraulic actuator and signalling device for low pressure of oil (preferred) on steam or gas supply of turbine.

- Compressor control system (UC) – anti-surge regulation consists of recirculation valve control, which task consists in increasing flow rate through the compressor by applying gas from compressor discharge side on its suction side. Increasing of flow rate moves working point of compressor away from surge line, but the process can be simultaneously disturbed and compressor's effectiveness decreased (refer to chart below).

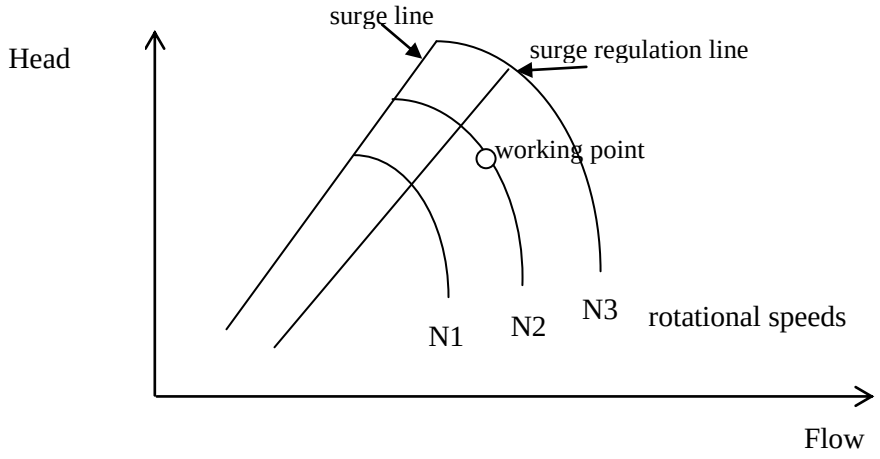

Chart: Compressor capacity map.

- Process control system (PC) – control system compares capacity of compressor, represented by discharge pressure, to process demand. In case of variable value adjustment, pressure on compressor's discharge is regulated by reference value.

Control systems of cooling and sealing systems are additionally specified for turbine.

5.2 Hardware implementation of control systems

Pictorial diagram, presenting requirements for connections and functions executed by individual devices connected with compressor/turbine control, is given below in Enclosure 1. Detailed list of signals transmitted for control and monitoring purposes between devices is subject to adjustment with GLSA.

It is required for all control signals between DCS/SIS PLC/speed governor to be implemented by means of hardware signals: 4-20 mA, 24 V DC contacts, while controlling of actuator (hydraulic type is preferred) of control valve on turbine supply with 20 – 160 mA signal is preferred. Communication links serve visualisation of measuring values and signalling of statuses/alarms.

All signals available on governor shall be sent over communication link to DCS system and presented on operator station (approved standards of data transmission over link, refer to specification GLSA 3710).

Delivery of rotational speed governor shall be accomplished by supplier of the machine. Machine supplier shall also deliver detailed assumptions for DCS system software in scope connected with compressor/turbine control. In case of separate delivery, supplier of the machine shall authorize proposed solutions.

Visualisation and control of compressor/turbine operation shall be possible from DCS system station, and also from local control panel equipped with LCD display. Basic language of screen messages is Polish. Indicators of measurements important for the compressor, such as temperature, discharge and suction pressure, flow rate through the compressor, shall be provided on plant in place of control panel location.

Another standard control system, connected with rotating equipment, is monitoring system along with protections against high temperature of bearings, vibrations, shaft displacement, and also high rotational speed of shaft. This specification does not raise this issue, because requirements for this system have been defined in specifications GLSA 2450 and 3200.

Protection systems of turbine driven machines shall conform to requirements of specification GLSA 3650 „Automatic system of protections”.

All control systems together with monitoring system shall be considered jointly, particularly in respect of equipment sharing on which they have been implemented, and communication between them.

5.3 Location of control devices

Such devices, as rotational speed governor, and DCS on which control function connected with anti-surge, cooling and sealing of compressor/turbine shall be implemented, shall be located in technical instrumentation room (TIR).

24V DC supply of field devices is preferred.

5.4 Rotational speed pick-ups

Rotating equipment of high importance in respect to process must be equipped with rotational speed pick-ups for measurement purposes, where installation of 3 sensors operating in 2oo3 logic is required. In places where this is impossible, e.g. for the sake of space deficiency for their installation,

two redundant sensors can be applied (indication of two values – manual or automatic signal change over from the first one on the second one in case of failure). In exceptional cases single sensor is allowed. Machine equipment with sensors subjects to detailed adjustment with GLSA.

The types of rotational speed pick-ups, that can be applied for measurements and adjustment of machine rotational speed, are:

- magnetic rotational speed pick-ups, which do not require external supply
- proximity rotation probes, which require external supply.

Preferred design of sensors, considering their installation in explosion hazardous area, is intrinsically safe design (Exi); for flameproof design GLSA approval is required.

The supplier of rotating machine shall deliver all sensors mounted on equipment together with cables to junction boxes, in easy accessible place on the machine edge. Cables between sensors and junction boxes shall feature design with flexible external metal armour.

5.5 Critical value prevention

Automatic protection against setting of speed within critical interval (refer to hypothetical graph), i.e. the band of speeds that are disadvantageous for machine operation – increased vibrations or other factors, is necessary. Manufacturer shall determine bands of critical speeds. Set value must be specified in specification.

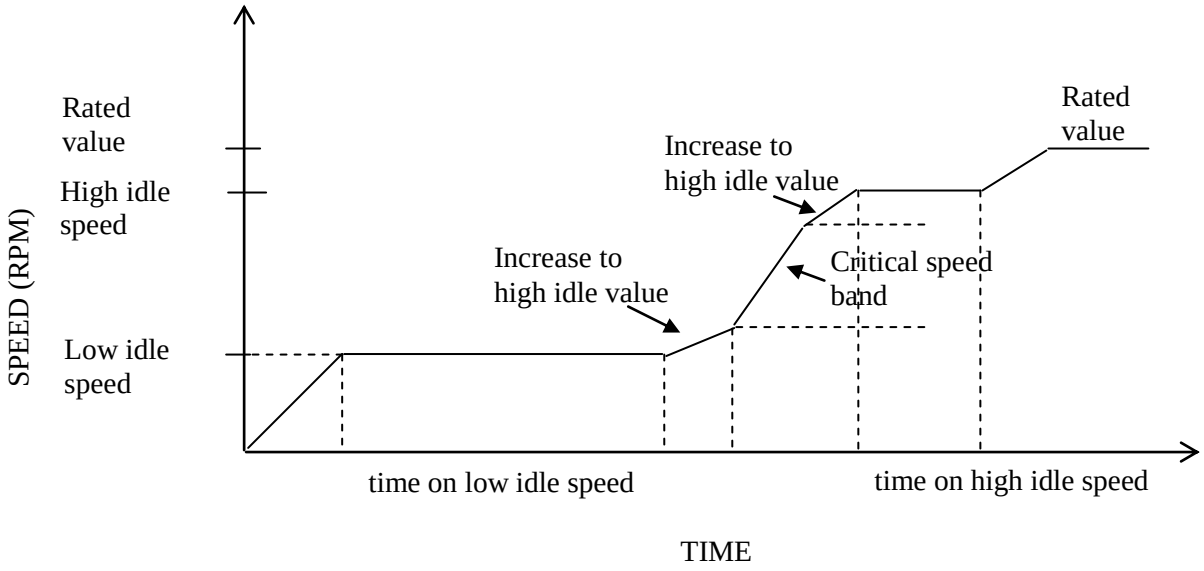

Fig. Automatic start-up sequence

Automatic transition through critical speed band is defined for rotating machine. Set speed cannot be stopped within critical band – the speed automatically passes through critical speed band. Shall command to increase/decrease of set speed in critical band is given, set value shall increase or decrease (depending on command given), in order to abandon critical band. Transition rate of set value through critical band is imposed by parameter „transition rate of critical speed".

Set value of speed cannot be entered directly from keyboard within programmed bands of critical speed. In such case error message shall be displayed on screen.

The producer of the machine shall deliver the scheme (diagram) of starting the machine with indicating the mode. An option of the manual mode enabling the diagnostic testing and servicing actuators are required.

5.6 Documentation

Design documentation shall conform to specifications GLSA 6400 and 6500. Apart from documents listed in them, supplier of machine shall deliver, among others:

- capacity map
- start-up procedure together with speed curve
- assumptions for programming of functions for compressor/turbine control in DCS
- interlocks' cause and effect diagram
- comprehensive equipment operating instruction along with description of control system diagnostics
- software algorithms
- drawings of rotational speed pick-ups' location, detailing places of sensors location, together with specification of their installation clearances
- proposed synoptic screens for DCS
- graphic layout of compressor/turbine control panel
- as well as other documents, if necessary for installation and operating purposes.

Furthermore, a CD containing PLC control software shall be delivered – refer also to specification GLSA 3640 „DCS and PLC control systems".

6 Relevant documents

Any "Technical Specification" issued by GRUPA LOTOS S.A. listed in Contract Files.

7 Norms and standards

It is in each case understood that quoted standards, regulations, directives and orders are of their latest editions, along with amendments, annexes and supplements in force.

Only norms that are specifically connected with *control systems for turbine driven machines* are listed below. The other norms concerning Control and Automatics are given in specification GLSA 3010 – General requirements of Control and Automatics branch.

7.1 Directives of European Community

2006/95/WE	Electrical equipment designed for use within certain voltage limits
2004/108/WE	Electromagnetic compatibility (EMC)
2008/768/WE	Directive EMC, which will have cancelled 93/465/EEC Directive since July 9. 2008

94/9/EWG Equipment explosive atmospheres (ATEX)

7.2 PN

PN-EN 60950 Safety of information technology equipment

PN-EN 55022 Information technology equipment. Radio disturbance characteristics. Limits and methods of measurement

PN-EN 55024 Information technology equipment. Immunity characteristics. Limits and methods of measurement

PN-EN 61000 Electromagnetic compatibility (EMC)

PN-EN ISO 9241 (all parts) Ergonomic requirements for office work with visual display terminals (VDTs)

8 Enclosures

Enclosure No:1 **Equipment realization of the control system with compressor/turbine**

9 Record of changes

No.	Date	Description	Introduced by
1	30-11-2013 (rev. 1)	Review, update, standardize and changes to the Standard within scope of order No. OK/990/2012	Editorial board coordinated by T.Wróbel
-	31-08-2015	Page layout corrections, no contents changes.	T. Wróbel

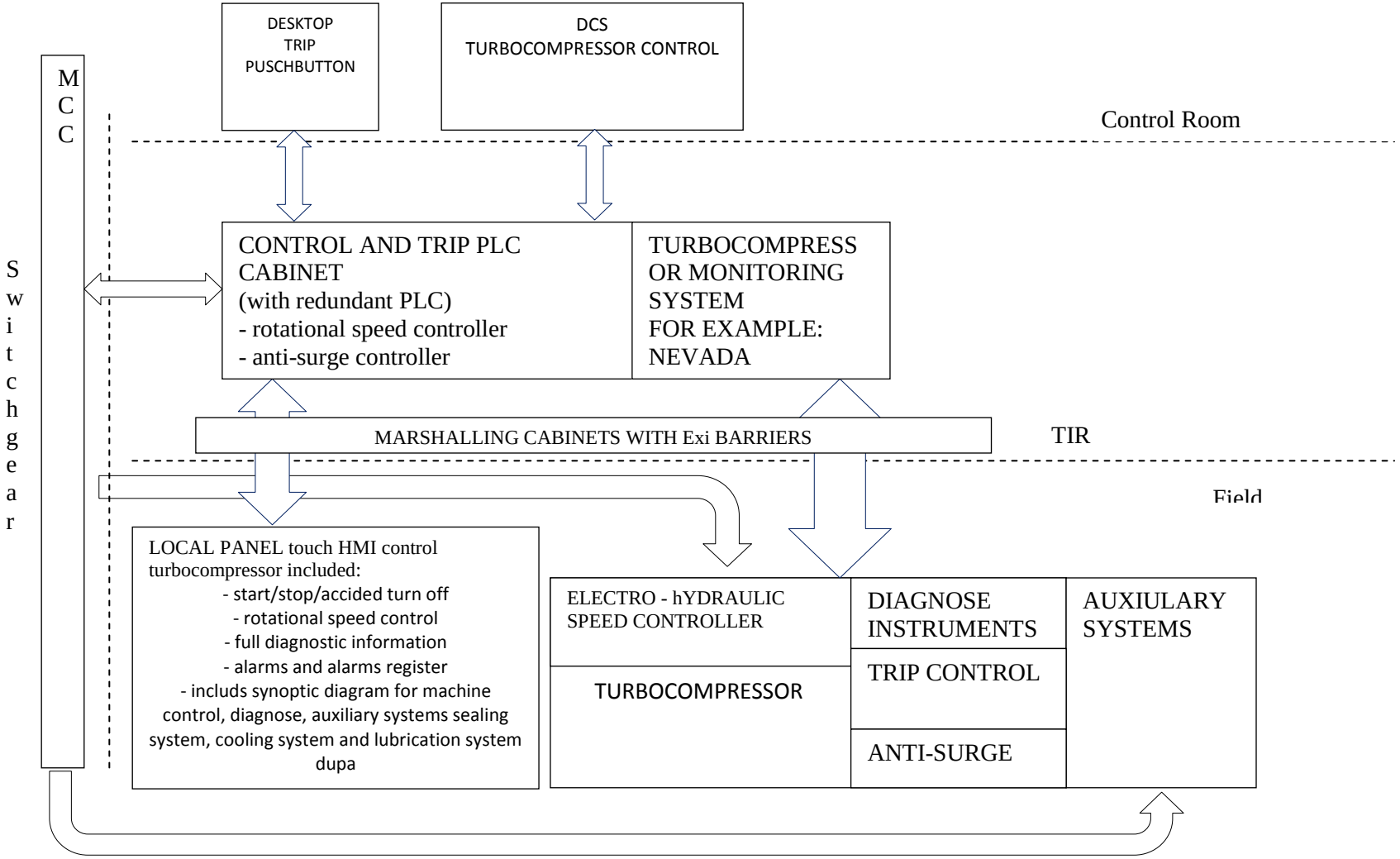

Enclosure No 1 Control System for Compressor / Turbine